No.	Revision	Date	Name
△			
△			

RoHS Compliant

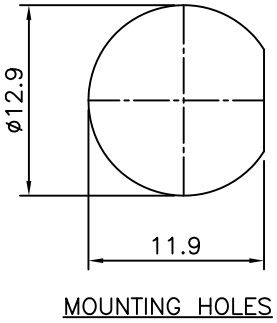

MOUNTING HOLES

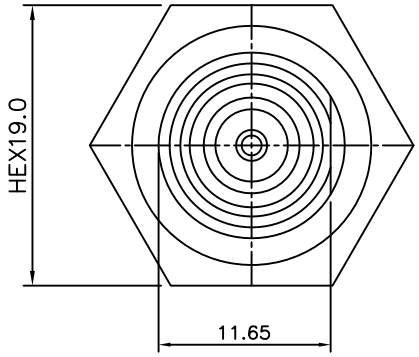

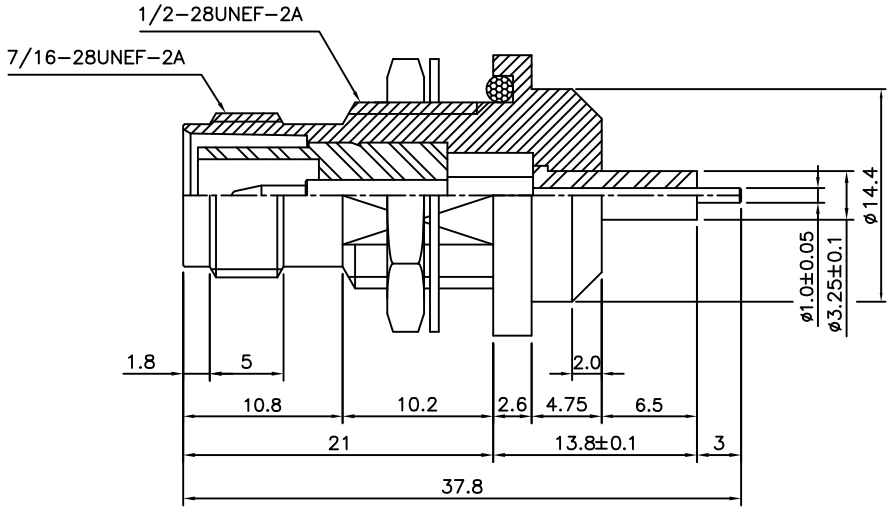

TNC BULKHEAD JACK RECEPTACLE
REVERSE POLARITY
(WITH SEAL)

Connector parts	Materials	Finish
Body,Nut,Washer	Brass	Nickel Plated
Center contact	Brass	Gold Plated
Insulator	PTFE	–
O-Ring	Silicone rubber	–

NO.	DESCRIPTION	Q'TY	MATERIAL	FINISH	REMARKS.
PARTS No.	TNC-506-005	NAME	TNC-BJ-R.P RECEP.		APPROVED
MATERIAL	FINISH	TOLERANCES	OTHERWISE SPEC. ±0.05	ANGLES ±1°	CHECKED
SCALE	UNIT mm				DESIGNED S.J.LEE
DWG NO.	TNC-506-005				DATE. 19/DEC/2013

CUSTOMER

DONGJIN TI.