No.	Revision	Date	Name
1	PN Change from 1T-513-5123S	13/MAR/2014	S.J.PARK

RoHS Compliant

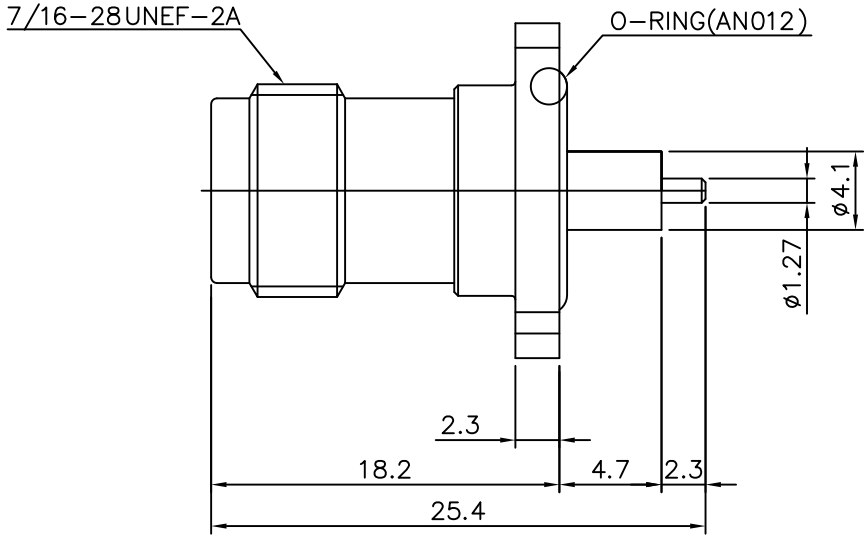

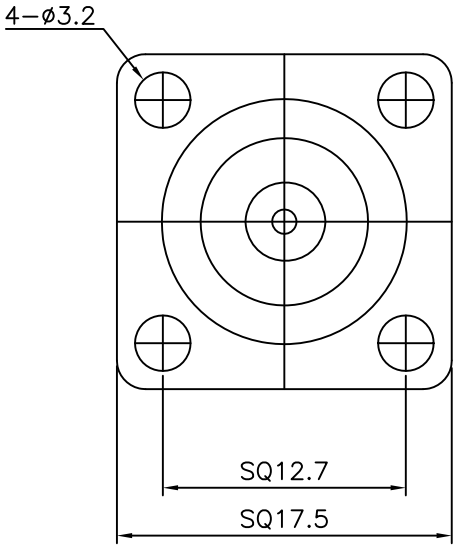

TNC Panel Receptacle
JACK-4H(SQ17.5)
With SEAL

Connector parts	Materials	Finish
Body	Brass	Nickel Plated
Center contact	Beryllium copper	Gold Plated
Insulator	Teflon	-
O-Ring	Silicone rubber	-

NO.	DESCRIPTION	Q'TY	MATERIAL	FINISH	REMARKS.
PARTS No.	TNC-504-003	NAME	TNC-F4H Receptacle		APPROVED
MATERIAL	FINISH	TOLERANCES OTHERWISE SPEC. ±0.05 ANGLES ±1°			CHECKED
		SCALE	UNIT mm		DESIGNED S.J.LEE
		DWG NO. TNC-504-003			DATE. 12/MAY/2007

CUSTOMER

DONGJIN TI.