| No. | Revision | Date | Name |
|---|---|---|---|
| 1 | PN Change from 1T-411-00 | 26/06/2013 | B.G.YUN |
| | | | |

SPECIFICATIONS

Impedance ; 50ohm

Frequency ; DC~6GHz

Working Voltage; 335 VRMS

VSWR ; max 1.25:1 UP TO 2.5GHz

Temperature range : -55°C to +165°C

RoHS Compliant

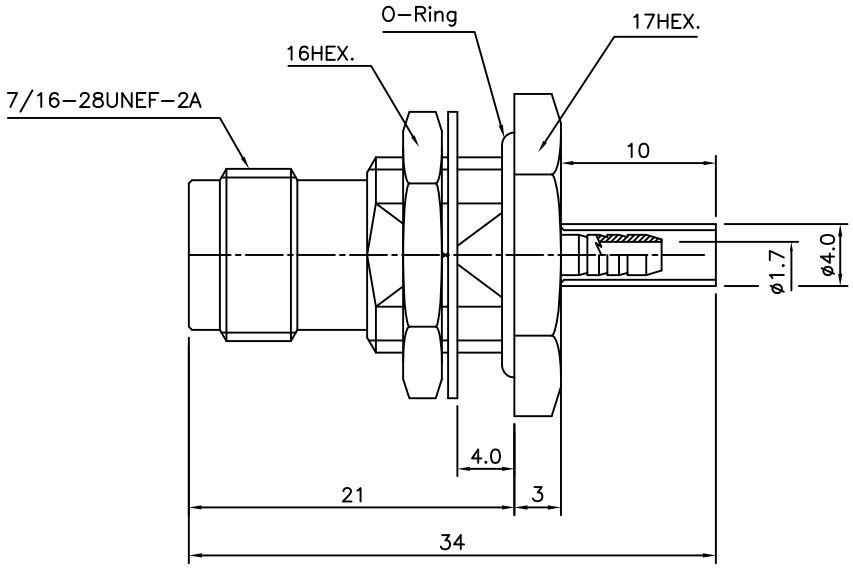


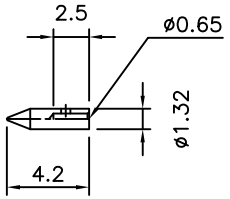


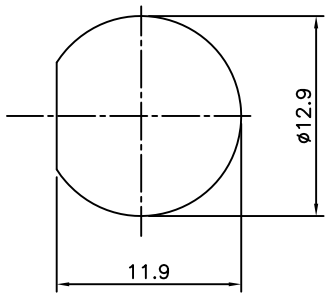


MOUNTING HOLES

| Item | Materials | Plating |
|---|---|---|
| Body | Brass | Nickel Plated |
| Center contact | Be-Cu | Gold Plated |
| Ferrule | Brass | Nickel Plated |
| Insulator | PTFE | - |
| O-Ring | Silicone rubber | - |
| Nut,Washer | Brass | Nickel Plated |

TNC-Bulkhead Rear Mount JACK
w/h Panel SEAL(IP67)
for Cable-RG316

| NO. | DESCRIPTION | Q'TY | MATERIAL | FINISH | REMARKS. |
|---|---|---|---|---|---|
| PARTS No. | TNC-411-001 | NAME | TNC-BR/J-316 | | APPROVED |
| MATERIAL | FINISH | TOLERANCES OTHERWISE SPEC. ±0.05 ANGLES ±1° | | | CHECKED |
| | | SCALE | UNIT mm | | DESIGNED S.J.LEE |
| CUSTOMER | DONGJIN TI. | DWG NO. | TNC-411-001 | | DATE. 28/FEB/2013 |