No.	Revision	Date	Name
1	PN Change from 1T-212RP-00	13/MAR/2014	S.J.PARK

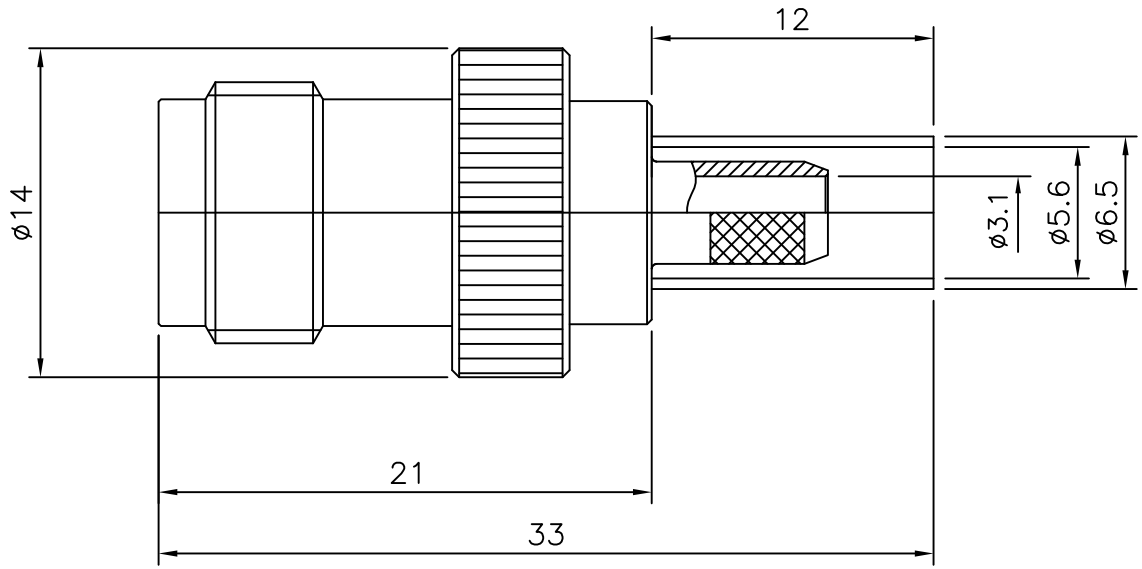

TNC-Straight JACK for Cable-RG400 REVERSE POLARITY

Connector parts	Materials	Finish
Body	Brass	Nickel Plated
Center contact	Brass	Gold Plated
Ferrule	Brass	Nickel Plated
Insulator	PTFE	-

NO.	DESCRIPTION	Q'TY	MATERIAL	FINISH	REMARKS.
PARTS No.	TNC-212-007	NAME	TNC-SJ 400 RP		APPROVED
MATERIAL	FINISH	TOLERANCES	OTHERWISE SPEC. ±0.05 ANGLES ±1°		CHECKED
SCALE	UNIT mm				DESIGNED S.J.LEE
DWG NO.	TNC-212-007				DATE. 2002/7/13

CUSTOMER

DONGJIN TI.