No.	Revision	Date	Name
1	PN Change from 1T-101-00	27/JAN/2014	S.J.PARK

SPECIFICATIONS

Impedance ; 50 ohm

Frequency ; DC~11GHz

Voltage rating ; 500 VRMS

Temperature range : -55°C to +145°C

RoHS Compliant

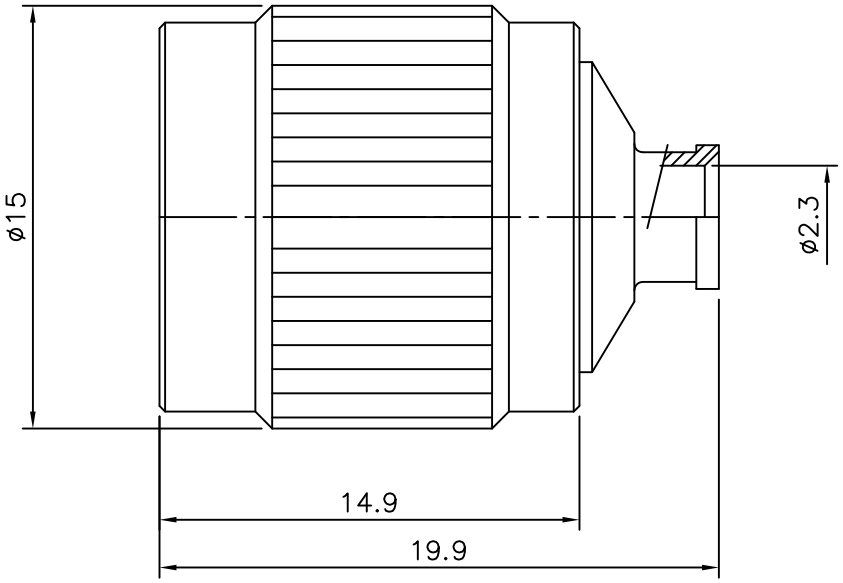

TNC-Straight-PLUG
for Cable-UT085

Connector parts	Materials	Finish
Coupling Cap	Brass	Nickel Plated
Body	Brass	Nickel Plated
Center contact	Brass	Gold Plated
Gasket	Silicone rubber	-
Insulator	PTFE	-

NO.	DESCRIPTION	Q'TY	MATERIAL	FINISH	REMARKS.
PARTS No. TNC-101-001		NAME TNC-SP-085			APPROVED
MATERIAL	FINISH	TOLERANCES OTHERWISE SPEC. ±0.05 ANGLES ±1°			CHECKED
		SCALE	UNIT mm		DESIGNED S.J.LEE
		DWG NO. TNC-101-001			DATE. 2001.05/07

CUSTOMER

DONGJIN TI.