No.	Revision	Date	Name
1	PN Change from 1MA-602SG-7262	13/AUG/2013	S.J.PARK

RoHS Compliant

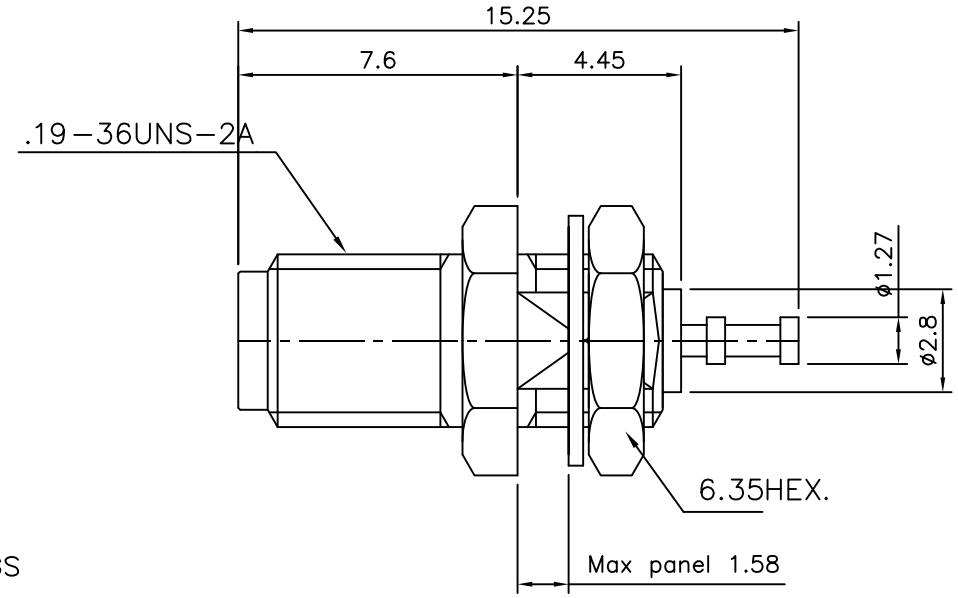

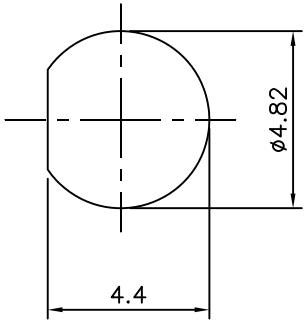

MOUNT HOLES

ELECTRICAL RATINGS

Impedance : 50 ohm
Frequency Range : DC~26.0GHz
Insulation Resistance : 5000MΩ min
Contact Resistance : < 3mΩ
Working Voltage : 500 VRMS max
Dielectric Withstanding Voltage : 750V min

Connector parts	Materials	Finish
Body,Nut	Stainless steel	Gold Plated
Center contact	Beryllium copper	Gold Plated
Insulator	TEFLON	-

SSMA Bulkhead Jack Receptacle
-Front Mount

NO.	DESCRIPTION	Q'TY	MATERIAL	FINISH	REMARKS.
PARTS No. SSMA-506-002		NAME SSMA-BH JACK RECEP.			APPROVED
MATERIAL	FINISH	TOLERANCES OTHERWISE SPEC. ±0.05 ANGLES ±1°			CHECKED
		SCALE	UNIT mm		DESIGNED S.J.LEE
		DWG NO. SSMA-506-002			DATE. 23/AUG/2011

CUSTOMER

DONGJIN TI.