No.	Revision	Date	Name
△			
△			

RoHS Compliant

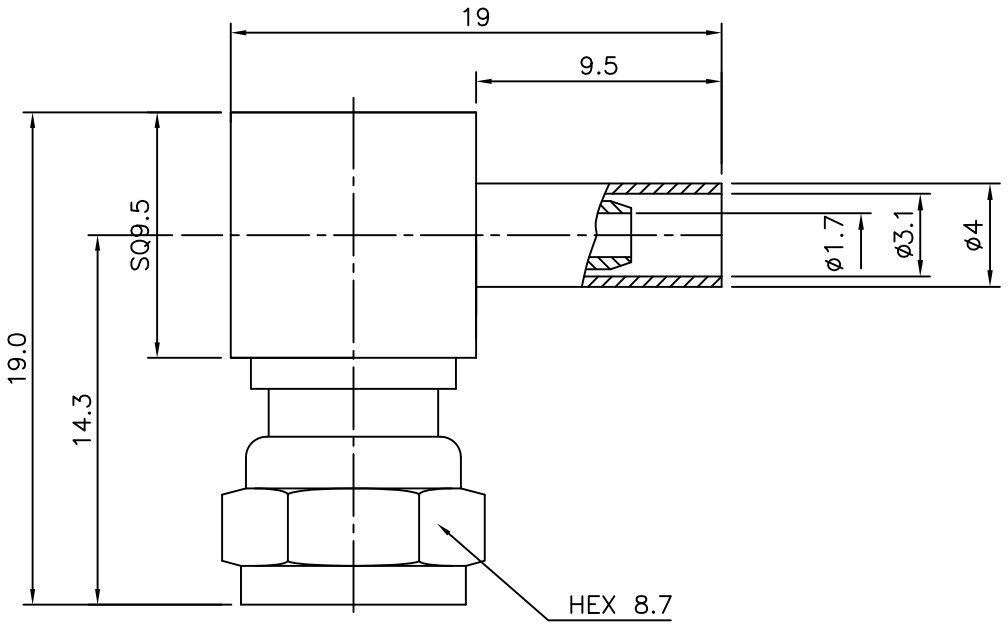

Item	Materials	Plating
Body	Brass	Gold Plated
Coupling	Brass	Gold Plated
Center contact	Brass	Gold Plated
Insulator	Teflon	–
Ferrule	Brass	Gold Plated

SMZ–Right Angle PLUG(75 OHm)
SCREW–ON for Cable–RG179

NO.	DESCRIPTION	Q'TY	MATERIAL	FINISH	REMARKS.
PARTS No.	SMZ–311–002	NAME	SMZ Type–LP179		APPROVED
MATERIAL	FINISH	TOLERANCES OTHERWISE SPEC. ±0.05 ANGLES ±1°			CHECKED
		SCALE	UNIT mm		DESIGNED S.J.LEE
CUSTOMER	DONGJIN TI.	DWG NO.	SMZ–311–002		DATE. 06/AUG/2009