| No. | Revision | Date | Name |
|---|---|---|---|
| 1 | PN Change from 1C-111-M10 | 15/10/2013 | B.G.YUN |
| | | | |

SPECIFICATIONS

Impedance ; 50ohm

Frequency ; DC~11GHz

Temperature range : -55°C to +155°C

2002/95/EC (RoHS) : Compliant

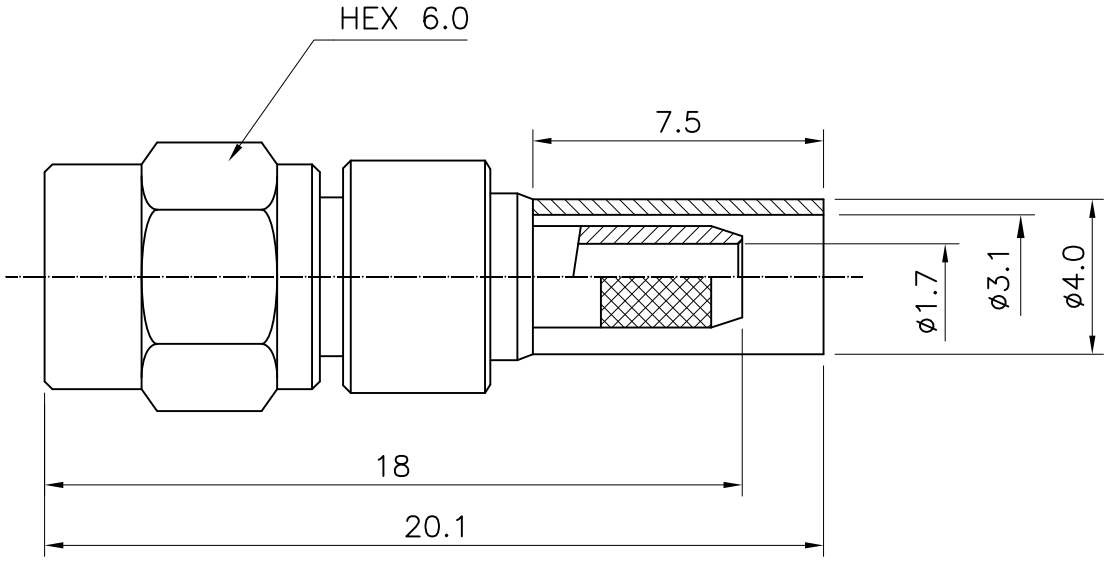


SMC-Straight-PLUG
for Cable-RG316,174

| Item | Materials | Plating |
|---|---|---|
| Coupling Cap | Brass | Gold Plated(0.3micron) |
| Body | Brass | Gold Plated(0.8micron) |
| Center contact | Beryllium copper | Gold Plated(1.27micron) |
| Ferrule | Brass | Gold Plated(0.1micron) |
| Insulator | TEFLON | - |

| NO. | DESCRIPTION | Q'TY | MATERIAL | FINISH | REMARKS. |
|---|---|---|---|---|---|
| PARTS No. | SMC-111-003 | NAME | SMC-SP-316 | | APPROVED |
| MATERIAL | FINISH | TOLERANCES OTHERWISE SPEC. ±0.05 ANGLES ±1° | | | CHECKED |
| | | SCALE | UNIT mm | | DESIGNED S.J.LEE |
| | DONGJIN TI. | DWG NO. | SMC-111-003 | | DATE. 30/MAR/2009 |

CUSTOMER