No.	Revision	Date	Name
1	PN Change from 1C-1111-002	14/08/2013	B.G.YUN
2	Length Change from 15.7 to 17.1	12/FEB/2014	B.G.YUN

RoHS Compliant

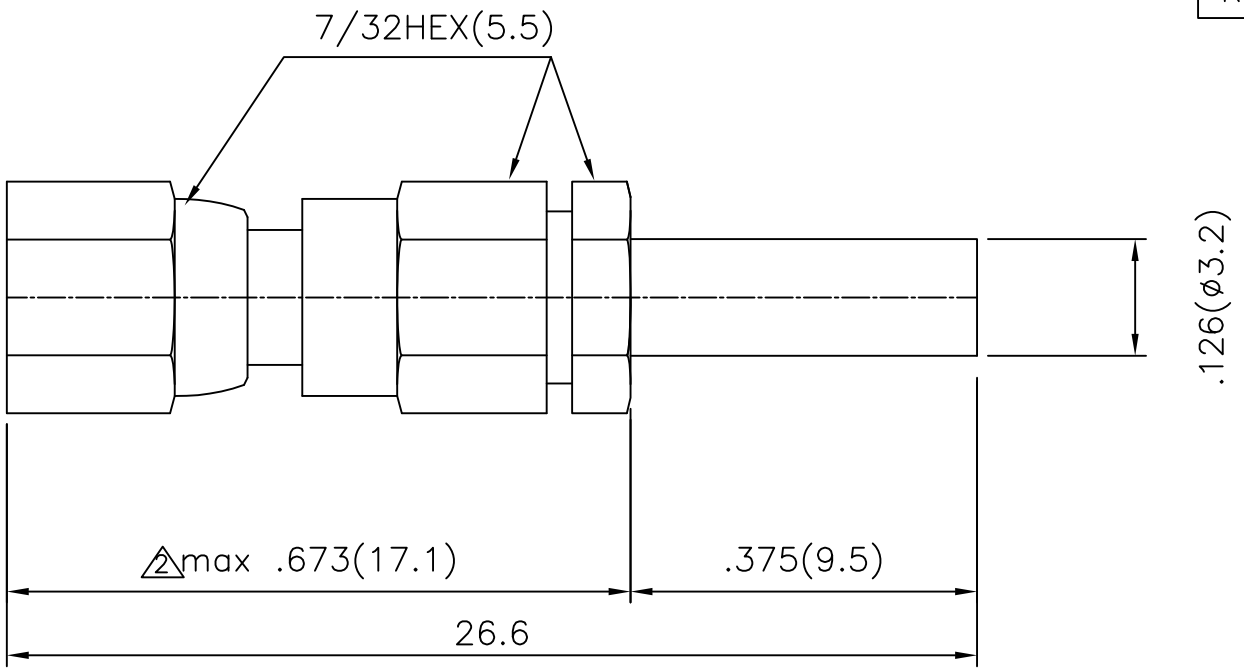

SMC-Straight Female
Cable PLUG-RG178
(Captive contact)

Connector parts	Materials	Finish
Body	Brass	Gold Plated
Coupling cap	Brass	Gold Plated
Center contact	Beryllium copper	Gold Plated
Insulator	TEFLON	-

NO.	DESCRIPTION	Q'TY	MATERIAL	FINISH	REMARKS.
PARTS No.	SMC-110-001	NAME	SMC-SP-178 CRIMP		APPROVED
MATERIAL	FINISH	TOLERANCES OTHERWISE SPEC. ±0.05 ANGLES ±1°			CHECKED
		SCALE	UNIT mm		DESIGNED S.J.LEE
		DWG NO.	SMC-110-001		DATE. 14/AUG/2013

CUSTOMER

DONGJIN TI.