No.	Revision	Date	Name
1	PN Change form 1P-502-J734007	12/AUG/2014	B.G.YUN

RoHS Compliant

ELECTRICAL DATA

Impedance	50Ω
Frequency range	DC ~ 4GHz
Contact current	DC 1.5A max
Voltage rating	250V rms
Contact resistance	Center contacts : 3.0mΩ Outer contacts : 0.5mΩ
Insulation resistance	1000MΩ min.
Insertion loss	0.6dB max
V.S.W.R	Straight 1.3+0.04f(GHz) Right angle 1.4+0.06f(GHz)
RF lekage	-55dBm min. between 2~3GHz

ENVIRONMENTAL DATA

Temperature range	-65°c ~ +125°c
Corrosion resistance	MIL-STD-202, Method 101, Condition B.
Moisture resistance	MIL-STD-202, Method 106
Thermal shock	MIL-STD-202, Method 107, Condition B.
Vibration	MIL-STD-202, Method 204, Condition D.

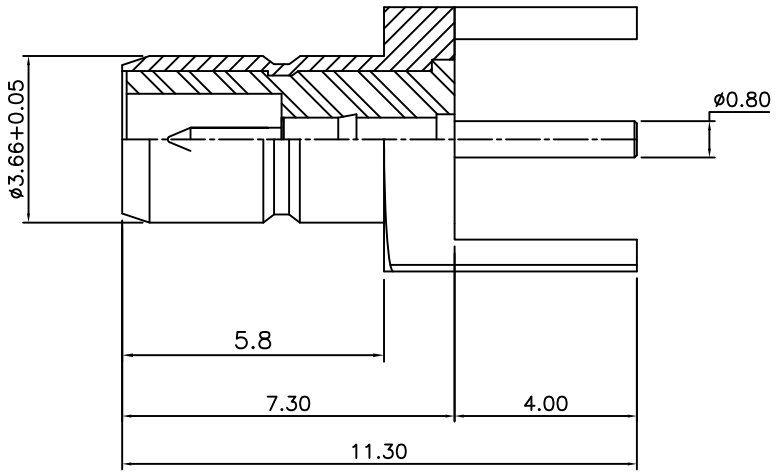

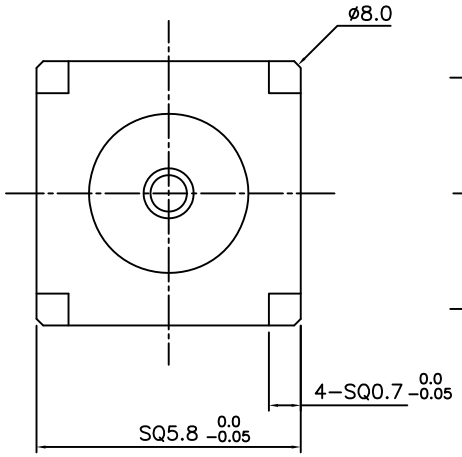

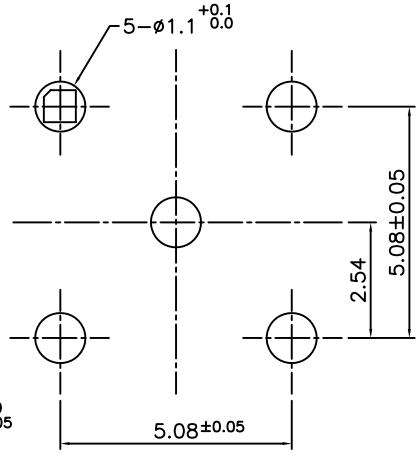

PCB MOUNT HOLES

SMB-Straight-JACK
PCB MOUNT

Item	Materials	Plating
Body	Brass	Gold Plated
Center contact	Beryllium copper	Gold Plated
Insulator	PTFE	-

NO.	DESCRIPTION	Q'TY	MATERIAL	FINISH	REMARKS.
PARTS No.	SMB-602-008	NAME	SMB-ST JACK-PCB		APPROVED
MATERIAL	FINISH				CHECKED
		TOLERANCES OTHERWISE SPEC. ±0.10	ANGLES ±1°		DESIGNED S.J.LEE
		SCALE	UNIT mm		DATE. 04/MAR/2011

CUSTOMER

DONGJIN TI.