No.	Revision	Date	Name
1	PN Change from 1S-806-00	25/11/2013	B.G.YUN

NOTES.
1. Impedance : 50 ohm
2. Frequency range ; Dc to 9.0GHz
3. Return loss : >20dB(1.2:1) DC to 9.0GHz
4. Insulation resistance: 5000 Mohm
5. Average Power handling : 100W in 1GHz

RoHS Compliant

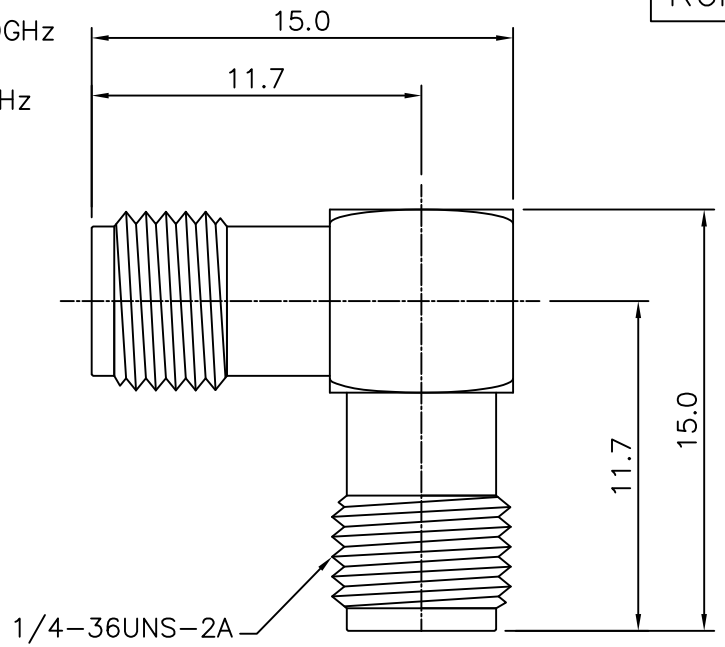

SMA Right Angle Jack to Jack Adaptor

Connector parts	Materials	Finish
Body	Brass	Gold plated
Center contact	Beryllium copper	Gold plated
Insulator	PTFE	–

NO.	DESCRIPTION	Q'TY	MATERIAL	FINISH	REMARKS.
PARTS No.	SMA-806-009	NAME	SMA-R/A-JJ Adaptor		APPROVED
MATERIAL	FINISH	TOLERANCES	OTHERWISE SPEC. ±0.05	ANGLES ±1°	CHECKED
		SCALE	UNIT mm		DESIGNED S.J.LEE
CUSTOMER	DONGJIN TI.	DWG NO.	SMA-806-009		DATE. 2001.5/15