No.	Revision	Date	Name
1	PN Change from 1S-522-S160	03/SEP/2013	S.J.PARK

ELECTRICAL RATINGS
- Impedance: 50ohm
- Frequency Range: DC~18GHz
- Insulation Resistance: 5000MΩ min
- Contact Resistance: < 3MΩ
- Working Voltage: 335 VRMS max
- Dielectric Withstanding Voltage: 1000V min

RoHS Compliant

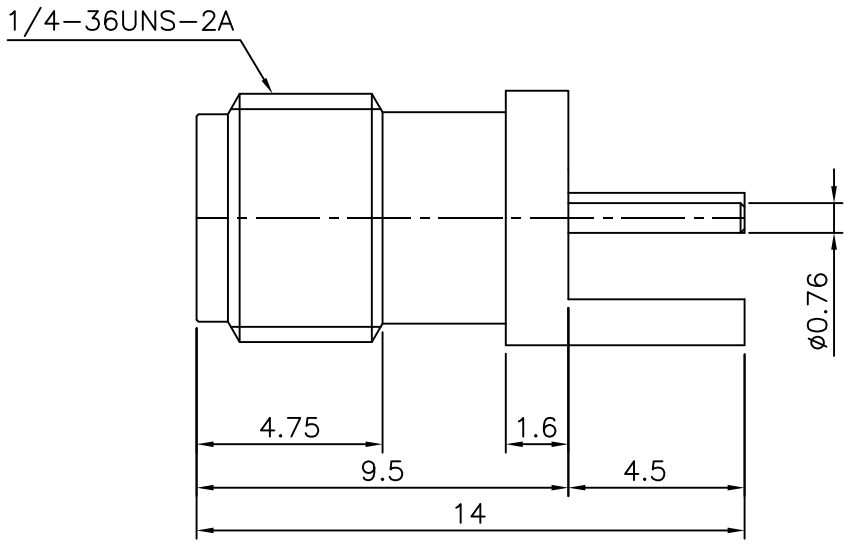

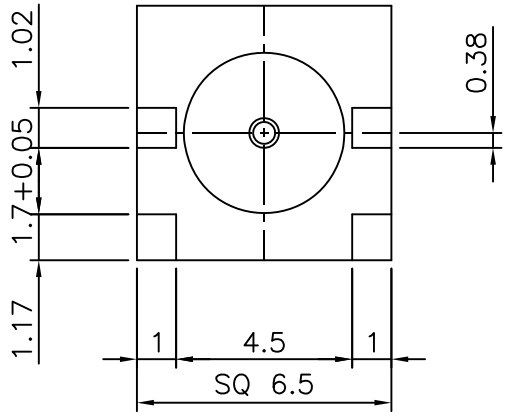

Connector parts	Materials	Finish
Body	Brass	Gold Plated
Center contact	Beryllium copper	Gold Plated
Insulator	TEFLON	-

SMA-PCB Eage Mount Jack Receptacle
-Round Contact(1.60mm Board)

NO.	DESCRIPTION	Q'TY	MATERIAL	FINISH	REMARKS.
PARTS No. SMA-604-001		NAME SMA-Side/J-PCB			APPROVED
MATERIAL	FINISH	TOLERANCES OTHERWISE SPEC. ±0.05 ANGLES ±1°			CHECKED
		SCALE	UNIT mm		DESIGNED S.J.LEE
CUSTOMER	DONGJIN TI.	DWG NO. SMA-604-001			DATE. 09/NOV/2004