No.	Revision	Date	Name
△			
△			

ELECTRICAL RATINGS

Impedance : 50 ohm
Frequency Range : DC~12.4GHz
V.S.W.R : 1.10 +0.1xF(GHz)
Insertion loss : 0.05 √F(GHz)
Working Voltage : 335 VRMS max
Dielectric Withstanding Voltage : 750V min
Insulation Resistance : 5000MΩ min
Temperature range : −55~+145℃

RoHS Compliant

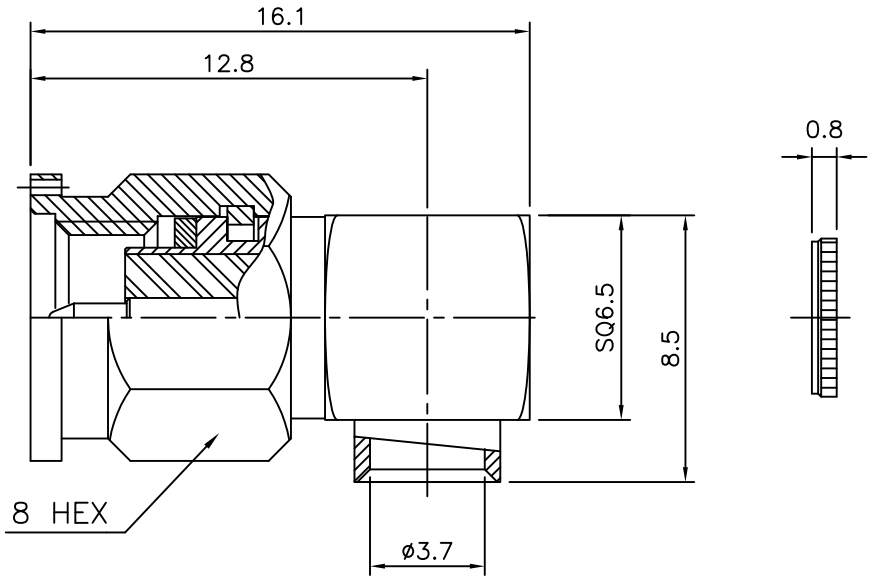

Connector parts	Materials	Finish
Coupling Cap	Stainless steel	Passivated
Body,Cap	Stainless steel	Gold Plated
Center contact	Brass	Gold Plated
Insulator	PTFE	−
Gasket	Silicone rubber	−

SMA−Right Angle−PLUG
for Cable−UT141
(with Wire lock hole)

NO.	DESCRIPTION	Q'TY	MATERIAL	FINISH	REMARKS.
PARTS No.	1S−302SP−00	NAME	SMA−LP−141		APPROVED
MATERIAL	FINISH	TOLERANCES OTHERWISE SPEC. ±0.05 ANGLES ±1°			CHECKED
		SCALE N/S	UNIT mm		DESIGNED S.J.LEE
CUSTOMER	DONGJIN TI.	DWG NO.	SMA−302−014		DATE. 15/JAN/2014