No.	Revision	Date	Name
1	PN Change from 1S-111-00	24/06/2013	B.G.YUN

SPECIFICATIONS

Impedance ; 50ohm

Frequency ; DC~12.4GHz

Temperature range : −55°C to +155°C

2002/95/EC (RoHS) : Compliant

RoHS Compliant

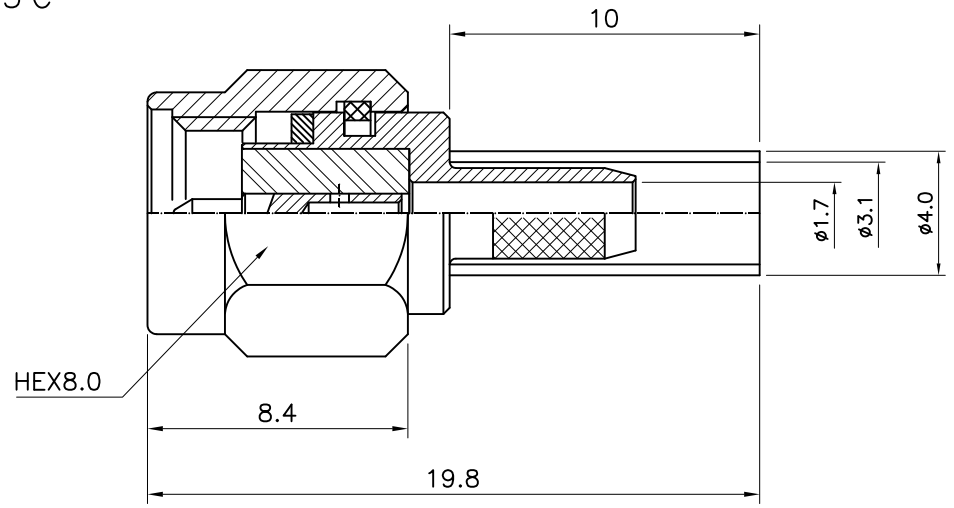

SMA-Stright-PLUG
for Cable:RG316,174

Connector parts	Materials	Finish
Coupling Cap	Brass	Gold Plated
Body	Brass	Gold Plated
Center contact	Brass	Gold Plated
Ferrule	Brass	Gold Plated
Insulator	PTFE	–
Gasket	Silicone rubber	–

NO.	DESCRIPTION	Q'TY	MATERIAL	FINISH	REMARKS.
PARTS No.	SMA-111-001	NAME	SMA-SP-RG316		APPROVED
MATERIAL	FINISH	TOLERANCES OTHERWISE SPEC. ±0.05 ANGLES ±1°			CHECKED
		SCALE N/S	UNIT mm		DESIGNED S.J.LEE
DONGJIN TI.		DWG NO. SMA-111-001			DATE. 24/NOV/2006

CUSTOMER