| No. | Revision | Date | Name |
|---|---|---|---|
| 1 | PN Change from 1S-102RP-00 | 09/JAN/2014 | S.J.PARK |
| | | | |

SPECIFICATIONS

Impedance ; 50ohm
Frequency range ; DC~18GHz
Insertion loss ; 0.15dB max@18GHz
V.S.W.R ; 1.20:1 max@18GHz
Temperature range : -55°C to +155°C

RoHS Compliant

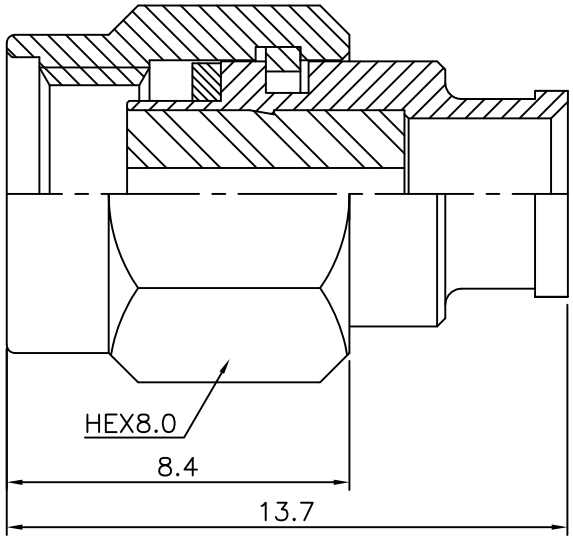


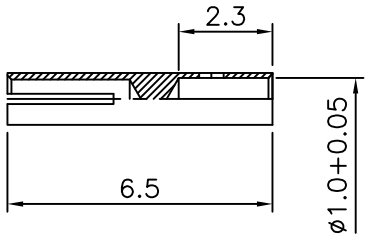


CENTER CONTACT

| Connector parts | Materials | Finish |
|---|---|---|
| Coupling Cap | BRASS | Gold Plated |
| Body | BRASS | Gold Plated |
| Center contact | BeCu | Gold Plated |
| Insulator | PTFE | - |

SMA-Straight-PLUG
Reverce Polarity
for Cable-UT141, RG402

| NO. | DESCRIPTION | Q'TY | MATERIAL | FINISH | REMARKS. |
|---|---|---|---|---|---|
| PARTS No. SMA-102-024 | | NAME SMA-SP-RP 141 | | | APPROVED |
| MATERIAL | FINISH | TOLERANCES OTHERWISE SPEC. ±0.05 ANGLES ±1° | | | CHECKED |
| | | SCALE | UNIT mm | | DESIGNED S.J.LEE |
| CUSTOMER | DONGJIN TI. | DWG NO. SMA-102-024 | | | DATE. 30/NOV/2006 |