No.	Revision	Date	Name
△			
△			

RoHS Compliant

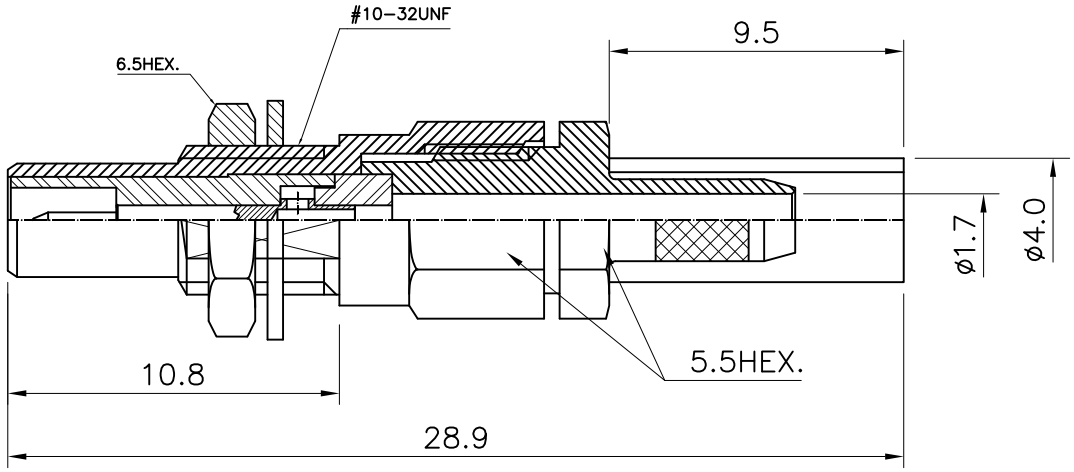

Connector parts	Materials	Finish
Body,Nut,Washer	BRASS	Gold Plated
Back nut	BRASS	Gold Plated
Center contact	BRASS	Gold Plated
Insulator	Teflon	
Ferrule	BRASS	Gold Plated

SLB-Bulkhead male
Cable JACK-RG316,174
(Captive contact)

NO.	DESCRIPTION	Q'TY	MATERIAL	FINISH	REMARKS.
PARTS No. SLB-411-001		NAME SMB-BJ316 CRIMP			APPROVED
MATERIAL	FINISH	TOLERANCES OTHERWISE SPEC. ±0.05 ANGLES ±1°			CHECKED
		SCALE	UNIT mm		DESIGNED S.J.LEE
CUSTOMER	DONGJIN TI.	DWG NO. SLB-411-001			DATE. 08/NOV/2010