| No. | Revision | Date | Name |
|---|---|---|---|
| 1 | PN Change from 1N-411-F240 | 29/APR/2014 | S.J.PARK |
| | | | |

SPECIFICATIONS
Impedance : 50Ω
Frequency range : DC~6GHz
V.S.W.R : 1.20:1 max
Temperature range : −55°c ~ +125°c

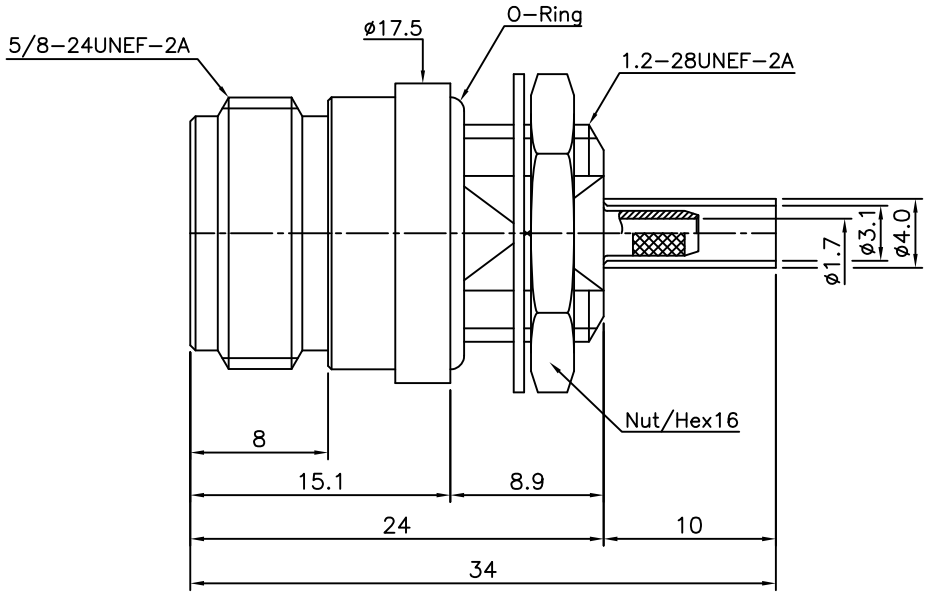


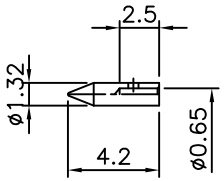


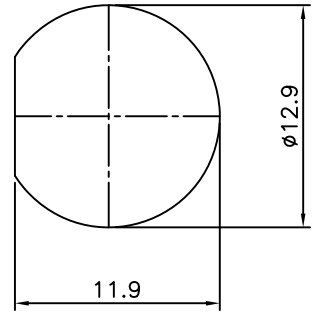


MOUNTING HOLES

| Item | Materials | Plating |
|---|---|---|
| Body,Nut,Washer | Brass | Nickel Plated |
| Center contact | Be-Cu | Gold Plated |
| Ferrule | Brass | Nickel Plated |
| Insulator | PTFE | − |

N-Bulkhead Front Mount JACK
w/h Panel seal
for Cable-RG316

| NO. | DESCRIPTION | Q'TY | MATERIAL | FINISH | REMARKS. |
|---|---|---|---|---|---|
| PARTS No. | N-411-002 | NAME | N-BR/J-316 | | APPROVED |
| MATERIAL | FINISH | TOLERANCES OTHERWISE SPEC. ±0.05 ANGLES ±1° | | | CHECKED |
| | | SCALE | UNIT mm | | DESIGNED S.J.LEE |
| | | DWG NO. | N-411-002 | | DATE. 20/DEC/2006 |

CUSTOMER

DONGJIN TI.