No.	Revision	Date	Name
1	PN Change from 1N-212-00	12/08/2013	B.G.YUN

RoHS Compliant

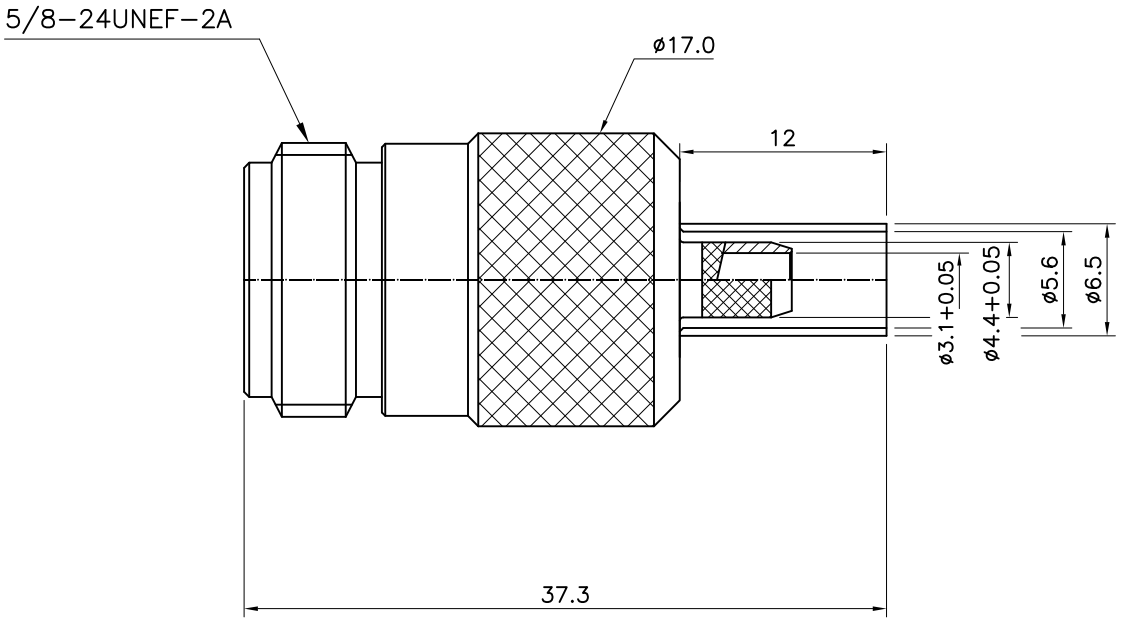

N-Type Straight JACK
For CABLE RG400.223,142

Item	Materials	Plating
Body	Brass	Nickel Plated
Center contact	Be-Cu	Gold Plated
Insulator	PTFE	-
Ferrule	Brass	Nickel Plated

NO.	DESCRIPTION	Q'TY	MATERIAL	FINISH	REMARKS.

PARTS No. N-212-001	NAME N-SJ-RG400	APPROVED
MATERIAL / FINISH	TOLERANCES OTHERWISE SPEC. ±0.05 ANGLES ±1°	CHECKED
	SCALE / UNIT mm	DESIGNED S.J.LEE
CUSTOMER	DONGJIN TI. / DWG NO. N-212-001	DATE. 11/DEC/2007