No.	Revision	Date	Name
1	PN Change from 1N-202-00	26/SEP/2013	S.J.PARK

RoHS Compliant

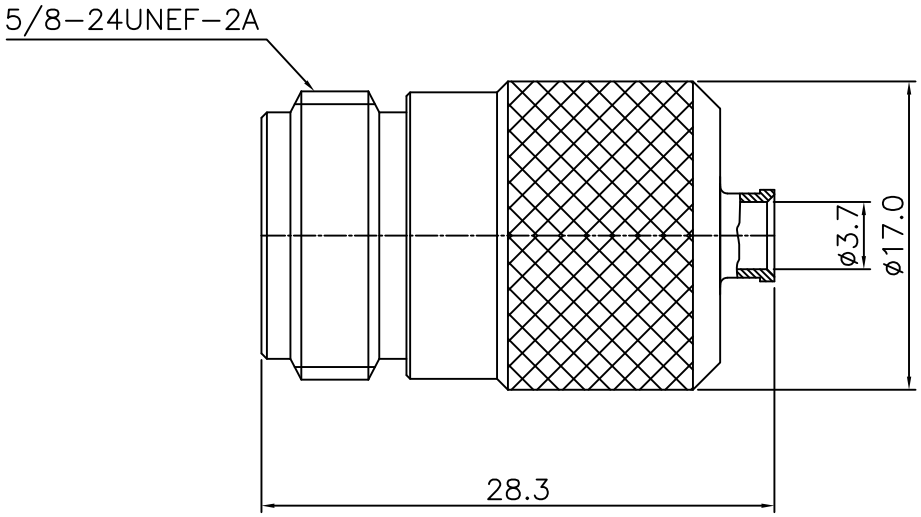

N-TYPE STRAIGHT JACK
for Cable-UT141

Item	Materials	Plating
Body	Brass	Nickel Plated
Center contact	Be-Cu	Gold Plated
Insulator	PTFE	-

NO.	DESCRIPTION	Q'TY	MATERIAL	FINISH	REMARKS.
PARTS No. N-202-001		NAME N-SJ-UT141			APPROVED
MATERIAL	FINISH	TOLERANCES OTHERWISE SPEC. ±0.05 ANGLES ±1°			CHECKED
		SCALE	UNIT mm		DESIGNED S.J.LEE
CUSTOMER	DONGJIN TI.	DWG NO. N-202-001			DATE. 11/DEC/2007