No.	Revision	Date	Name
1	PN Change from 1N-116-00	29/APR/2014	S.J.PARK

SPECIFICATIONS

Impedance ; 50ohm

Frequency ; DC~6GHz

Working Voltage; 1,000 VRMS

VSWR ; max 1.25:1 UP TO 2.5GHz

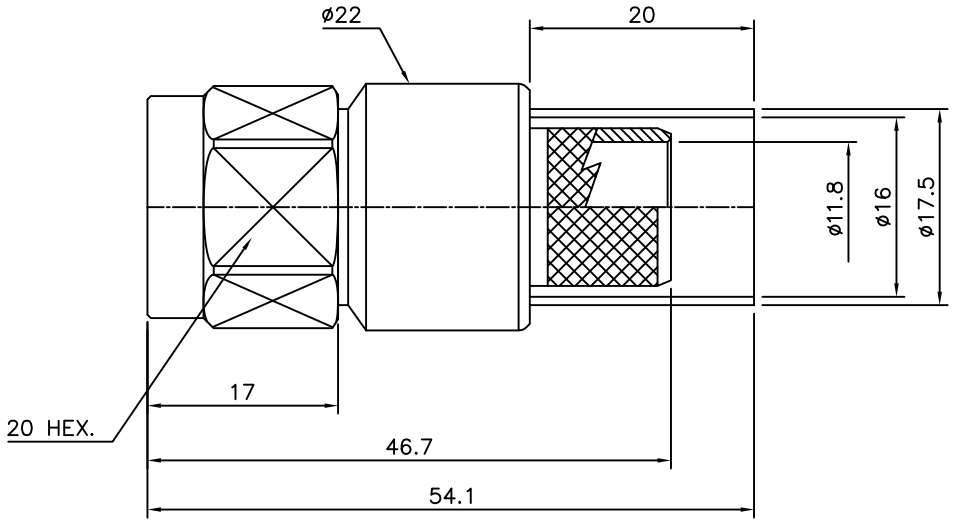

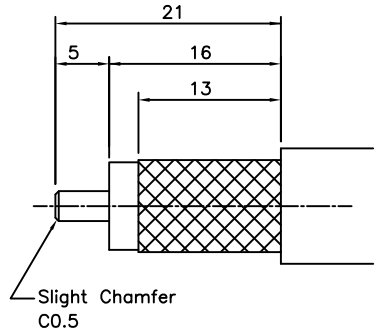

Recommended Stripping DIM'S

Recommended Crimp DIES : HEX15.5

Connector parts	Materials	Finish
Coupling Cap	Brass	Nickel Plated
Body	Brass	Silver Plated
Center contact	Brass	Gold Plated
Insulator	PTFE	–
Ferrule	Brass	Nickel Plated
Gasket	Silicone Rubber	

N-Type Straight PLUG
For CABLE LMR600

NO.	DESCRIPTION	Q'TY	MATERIAL	FINISH	REMARKS.
PARTS No. N-116-001		NAME N Type-SP-LMR600			APPROVED
MATERIAL	FINISH	TOLERANCES OTHERWISE SPEC. ±0.05 ANGLES ±1°			CHECKED
		SCALE N/S	UNIT mm		DESIGNED S.J.LEE
DONGJIN TI.		DWG NO. N-116-001			DATE. 18/JUL/2012