No.	Revision	Date	Name
1	PN Change from 1B-542-S6045	09/APR/2014	S.J.PARK

RoHS Compliant

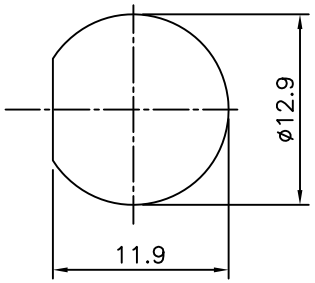

MOUNTING HOLES

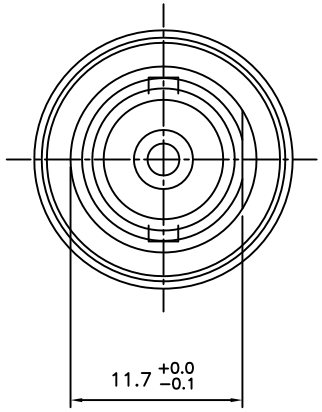

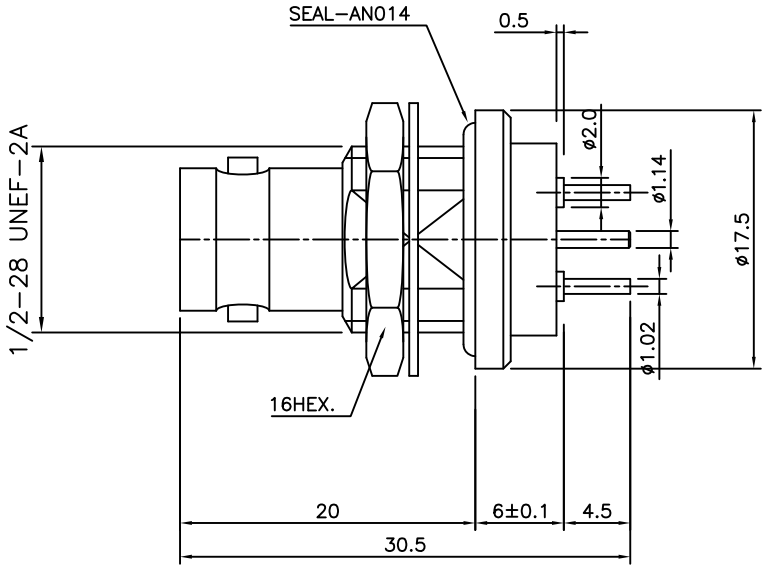

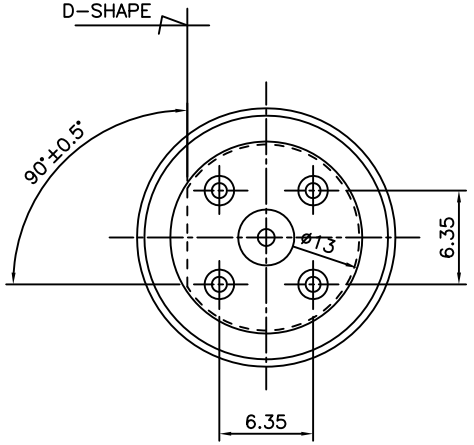

Connector parts	Materials	Finish
Body,Nut	Brass	Nickel Plated
Center contact	Be-Cu	Gold Plated
Insulator	PTFE	-
PCB LEGS	Brass	TIN Plated
O-RING	Silicone rubber	-

BNC BULKHEAD JACK
PCB MOUNT RECEPTACLE with SEAL

NO.	DESCRIPTION	Q'TY	MATERIAL	FINISH	REMARKS.
PARTS No. BNC-606-001		NAME BNC-BJ- RECEP.			APPROVED
MATERIAL	FINISH	TOLERANCES OTHERWISE SPEC. ±0.05 ANGLES ±1°			CHECKED
		SCALE	UNIT mm		DESIGNED S.J.LEE
CUSTOMER	DONGJIN TI.	DWG NO. BNC-606-001			DATE. 09/JUN/2008