No.	Revision	Date	Name
1	PN Change from 1B-521-00	09/APR/2014	S.J.PARK

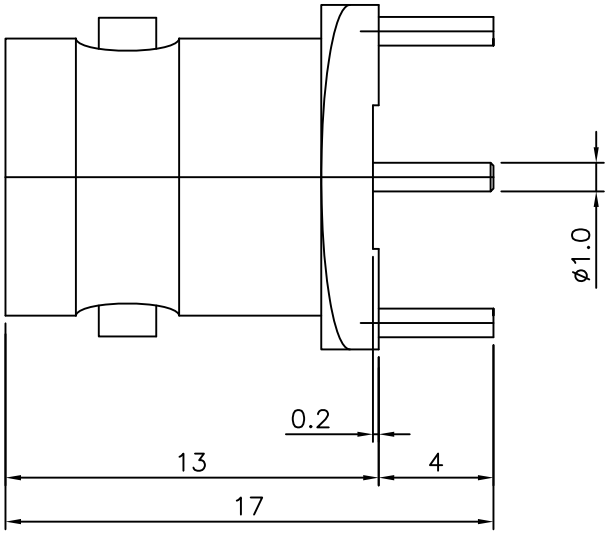

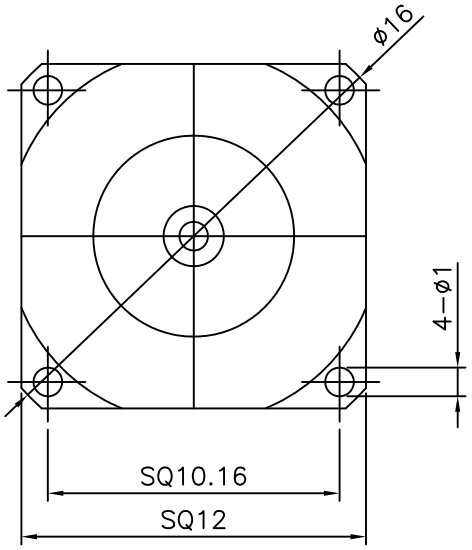

Item	Materials	Plating
Body	Brass	Gold Plated
Center contact	Beryllium copper	Gold Plated
Insulator	PTFE	-

NO.	DESCRIPTION	Q'TY	MATERIAL	FINISH	REMARKS.

PARTS No. BNC-602-001	NAME BNC-ST PCB JACK	APPROVED
MATERIAL / FINISH	TOLERANCES OTHERWISE SPEC. ±0.05 ANGLES ±1°	CHECKED
	SCALE N/S / UNIT mm	DESIGNED S.J.LEE
CUSTOMER	DONGJIN TI. / DWG NO. BNC-602-001	DATE. 2001.05/04