No.	Revision	Date	Name
1	PN Change from 1B-214-04	07/APR/2014	S.J.PARK

RoHS Compliant

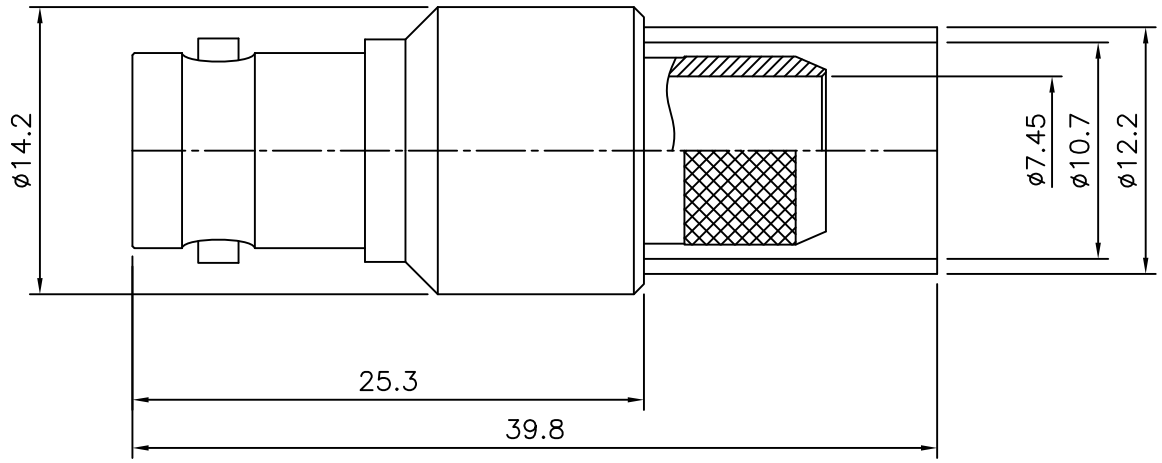

BNC-Straight JACK
for Cable-LMR400

Item	Materials	Plating
Body	Brass	Nickel Plated
Center contact	Be-Cu	Gold Plated
Insulator	PTFE	-
Ferrule	Brass	Nickel Plated

NO.	DESCRIPTION	Q'TY	MATERIAL	FINISH	REMARKS.
PARTS No.	BNC-214-001	NAME	BNC-SJ-LMR400		APPROVED
MATERIAL	FINISH	TOLERANCES OTHERWISE SPEC. ±0.05 ANGLES ±1°			CHECKED
		SCALE	UNIT mm		DESIGNED K.Y.SON
CUSTOMER	DONGJIN TI.	DWG NO.	BNC-214-001		DATE. 28/JUN/2012