No.	Revision	Date	Name
1	PN Change from 1A-136-R001	04/10/2013	B.G.YUN

RoHS Compliant

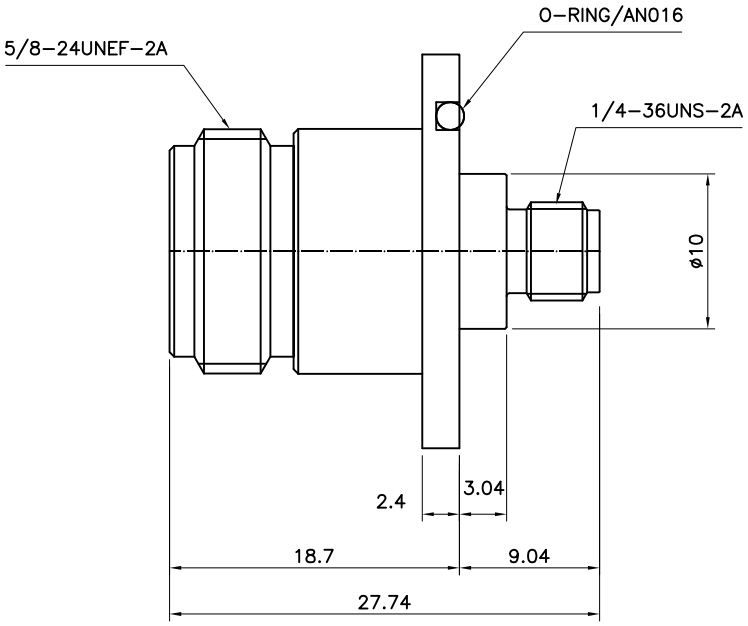

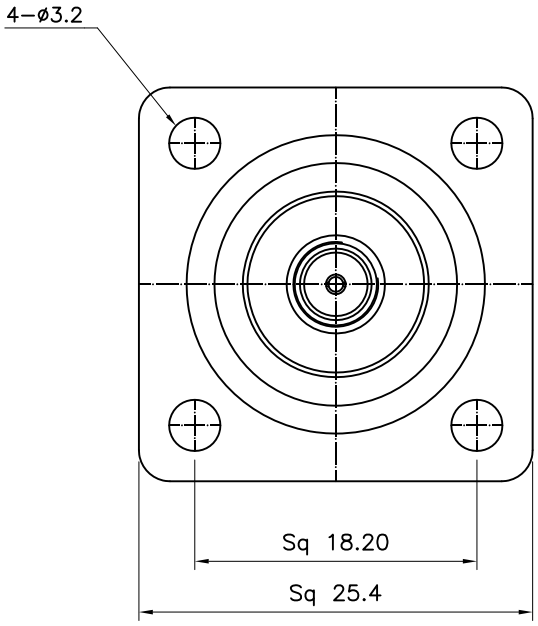

Item	Materials	Plating
Body	Brass	Nickel Plated
Center contact	Beryllium copper	Gold Plated
Insulator	PTFE	-
O-Ring	Silicone rubber	-

VSWR; 1.20:1 @DC~9GHz

N PANEL 4H-JACK TO SMA JACK ADAPTOR

NO.	DESCRIPTION	Q'TY	MATERIAL	FINISH	REMARKS.
PARTS No.	AD-1423-612	NAME	NJ4H-SMAJ-Adaptor		APPROVED
MATERIAL	FINISH	TOLERANCES	OTHERWISE SPEC. ±0.05	ANGLES ±1°	CHECKED
		SCALE	UNIT mm		DESIGNED S.J.LEE
CUSTOMER	DONGJIN TI.	DWG NO.	AD-1423-612		DATE. 23/FEB/2012