No.	Revision	Date	Name
△			
△			

RoHS Compliant

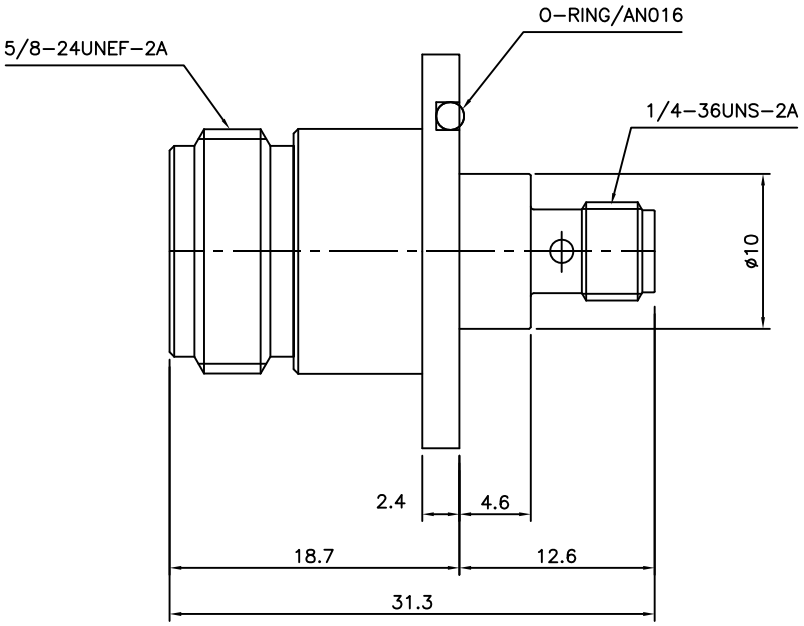

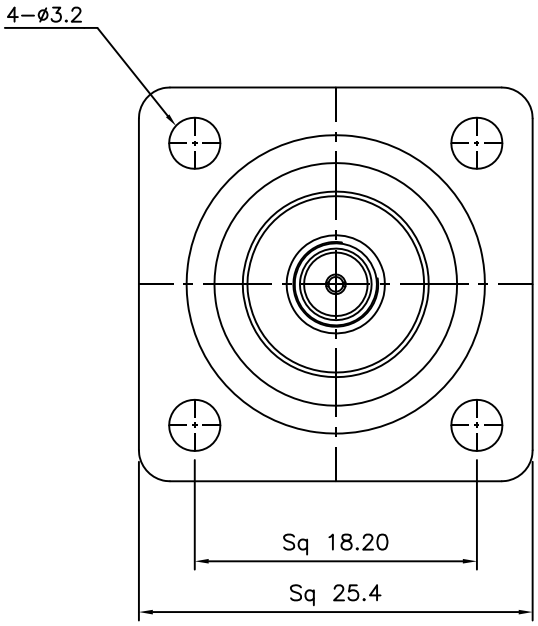

Item	Materials	Plating
Body	Brass	Nickel Plated
Center contact	Beryllium copper	Gold Plated
Insulator	PTFE	–
O-Ring	Silicone rubber	–

VSWR; 1.25:1 @DC~18 GHz

N PANEL 4H-JACK TO SMA JACK ADAPTOR

NO.	DESCRIPTION	Q'TY	MATERIAL	FINISH	REMARKS.
PARTS No.	AD-1423-607	NAME	NJ4H-SMAJ-Adaptor		APPROVED
MATERIAL	FINISH	TOLERANCES	OTHERWISE SPEC. ±0.05 ANGLES ±1°		CHECKED
		SCALE	UNIT mm		DESIGNED S.J.LEE
CUSTOMER	DONGJIN TI.	DWG NO.	AD-1423-607		DATE. 25/JUL/2011