No.	Revision	Date	Name
1	PN Change from 1A-156-260	29/08/2013	B.G.YUN

RoHS Compliant

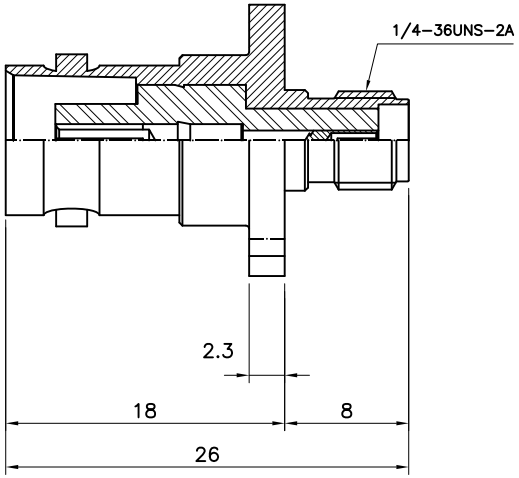

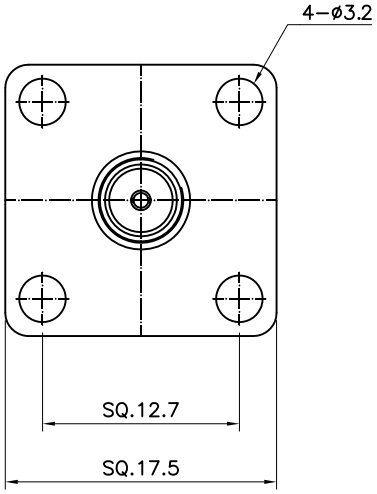

Item	Materials	Plating
Body	BRASS	Nickel Plated
Center contact	Beryllium copper	Gold Plated
Insulator	PTFE	-

VSWR; 1.20:1 @DC~4.0GHz

BNC-PANEL4H JACK TO SMA JACK ADAPTOR

NO.	DESCRIPTION	Q'TY	MATERIAL	FINISH	REMARKS.
PARTS No.	AD-1421-605	NAME	BNC-F4H/SMAJ-Adap		APPROVED
MATERIAL	FINISH	TOLERANCES OTHERWISE SPEC. ±0.05 ANGLES ±1°			CHECKED
		SCALE	UNIT mm		DESIGNED S.J.LEE
CUSTOMER	DONGJIN TI.	DWG NO.	AD-1421-605		DATE. 08/FEB/2010