	~30	~50	~120	~200	~300	~500	~1,000	1,001~
MACHINING	±0.05	±0.1		±0.2				
ASSEMBLY	±0.2	±0.3		±0.4				
ANGLE	±1°		±0°30'	±0°20'				
CABLE(Bending)	±1°		±2	±3	±4	±5	±6	
CABLE(Flexible)	0~+5			0~+10				0~L*0.01

No.	Revision	Date	Name
△			
△			

RoHS Compliant

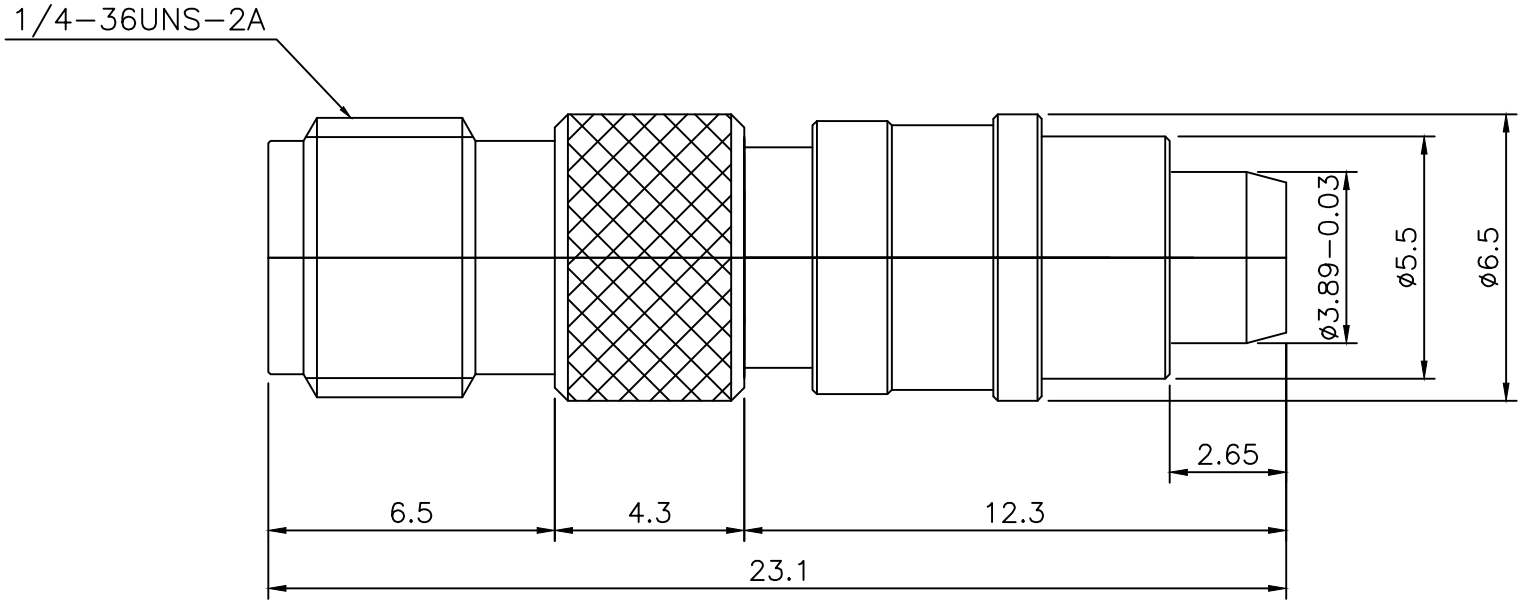

Item	Materials	Plating
Body	Brass	Nickel Plated
Center contact	Be-Cu	Gold Plated
Insulator	PTFE	-
Spring	Stainless Steel	-

SMA Female to SMBQ male ADAPTOR

NO.	DESCRIPTION	Q'TY	MATERIAL	FINISH	REMARKS.

PARTS No. AD-1415-407	NAME SMAF-SMBQM -ADAP	APPROVED K.Y.SON
MATERIAL / FINISH		CHECKED
	SCALE / UNIT mm	DESIGNED M.K.KIM
CUSTOMER	DONGJIN TI. DWG NO. AD-1415-407	DATE. 13/JUN/2015